Appendix 13.1
MINITRAC 0501D
System Layout

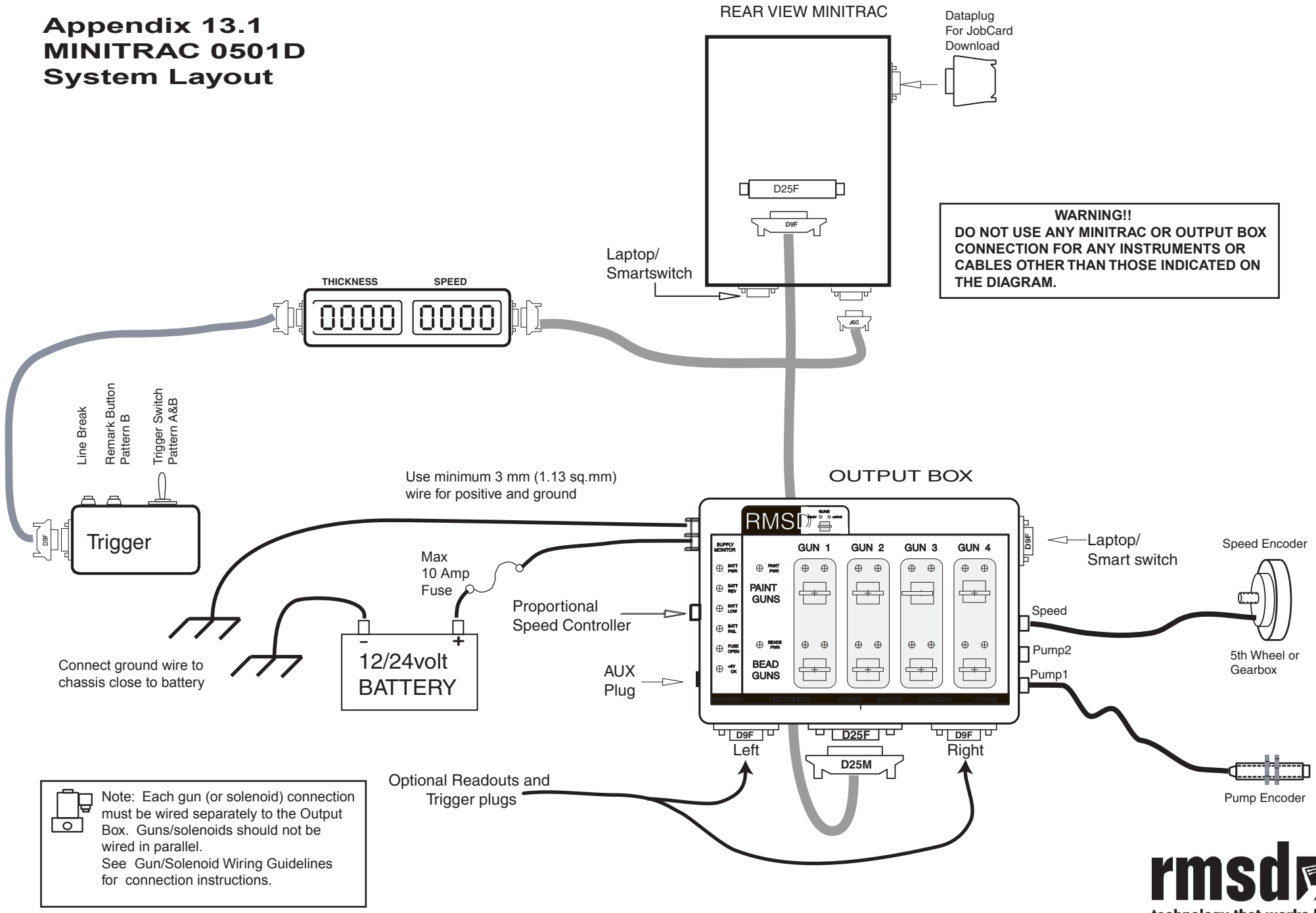

WARNING!!
DO NOT USE ANY MINITRAC OR OUTPUT BOX CONNECTION FOR ANY INSTRUMENTS OR CABLES OTHER THAN THOSE INDICATED ON THE DIAGRAM.

Note: Each gun (or solenoid) connection must be wired separately to the Output Box. Guns/solenoids should not be wired in parallel.
See Gun/Solenoid Wiring Guidelines for connection instructions.

rmsd
technology that works HARD